WWW.STORAGESHED-PLANS.COM

PROJECT PLAN INDEX

TITLE	1
FLOOR PLAN	2
FOUNDATION PLAN	3
ROOF PLAN	4
DEXULE FRONT ELEVATION	5
DEXULE REAR ELEVATION	6
DEXULE SIDE ELEVATION	7
RAFTER TEMPLATE	8
FULL SIZE RIDGE TEMPLATE	9
FULL SIZESEAT TEMPLATE	10
FULL SIZE GABLE TEMPLATE	11
WALL SECTION	12
ECONMY FRONT ELEVATION	13
ECONMY REAR ELEVATION	14
ECONMY SIDE ELEVATION	15

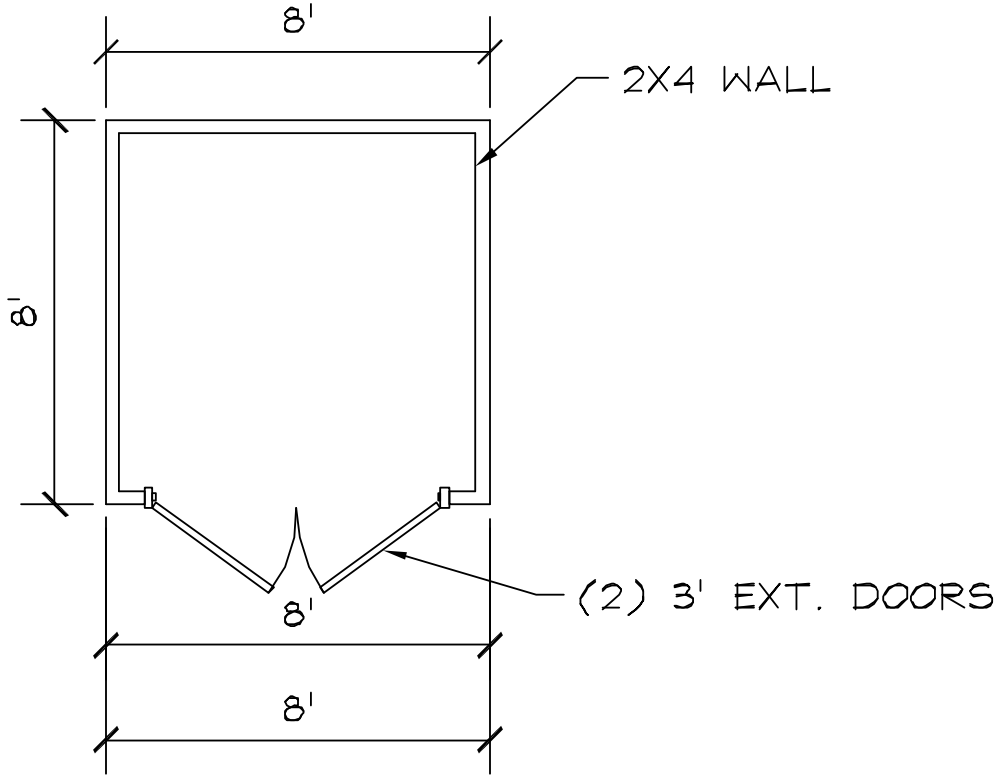

NOTE:
1. VERIFY ALL ROUGH OPENINGS PRIOR TO CONSTRUCTION.
2. 2X4 STUD WALLS 16" O.C.

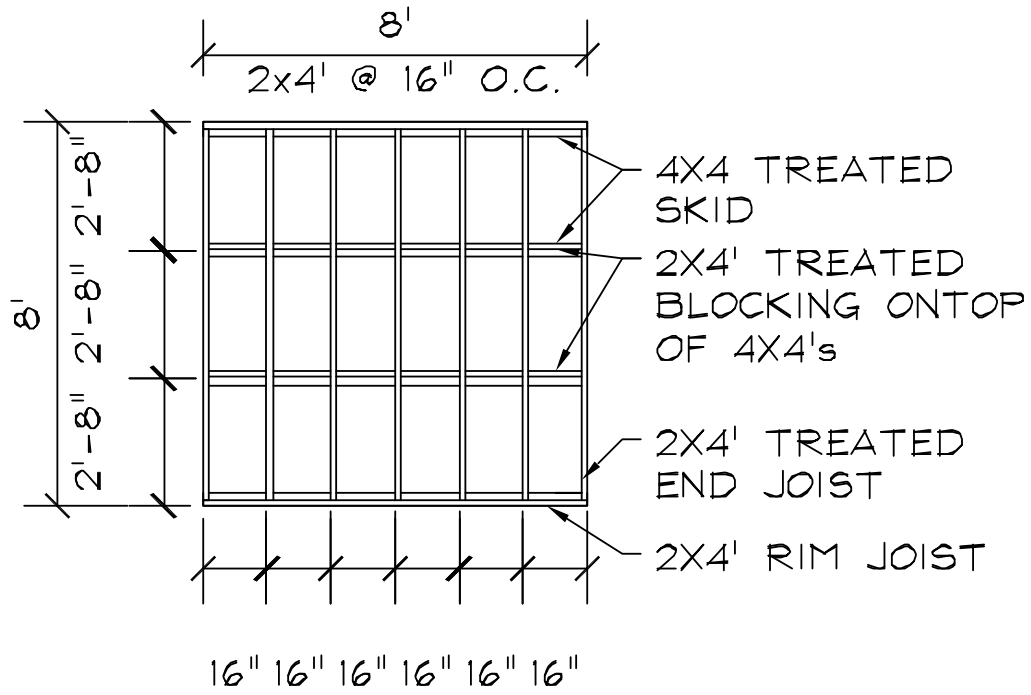
8'
2x4' @ 16" O.C.
8'
2'-8"
2'-8"
2'-8"
4X4 TREATED SKID
2X4' TREATED BLOCKING ONTOP OF 4X4's
2X4' TREATED END JOIST
2X4' RIM JOIST
16" 16" 16" 16" 16" 16"

WWW.STORAGESHED-PLANS.COM

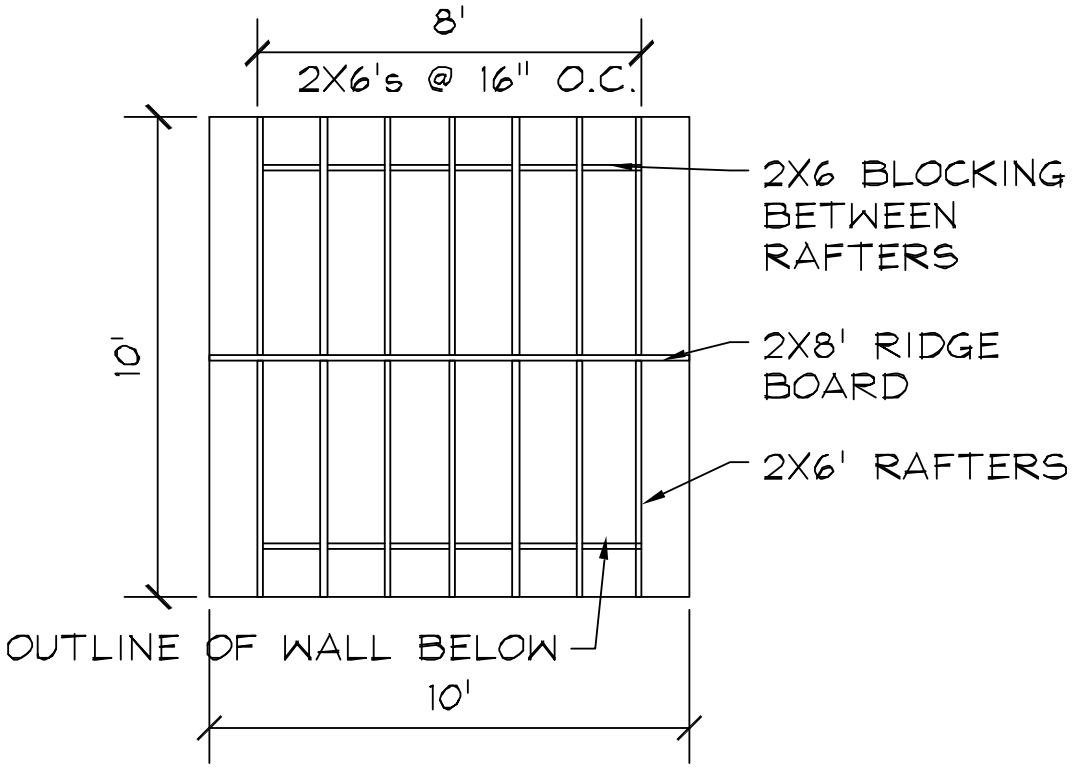

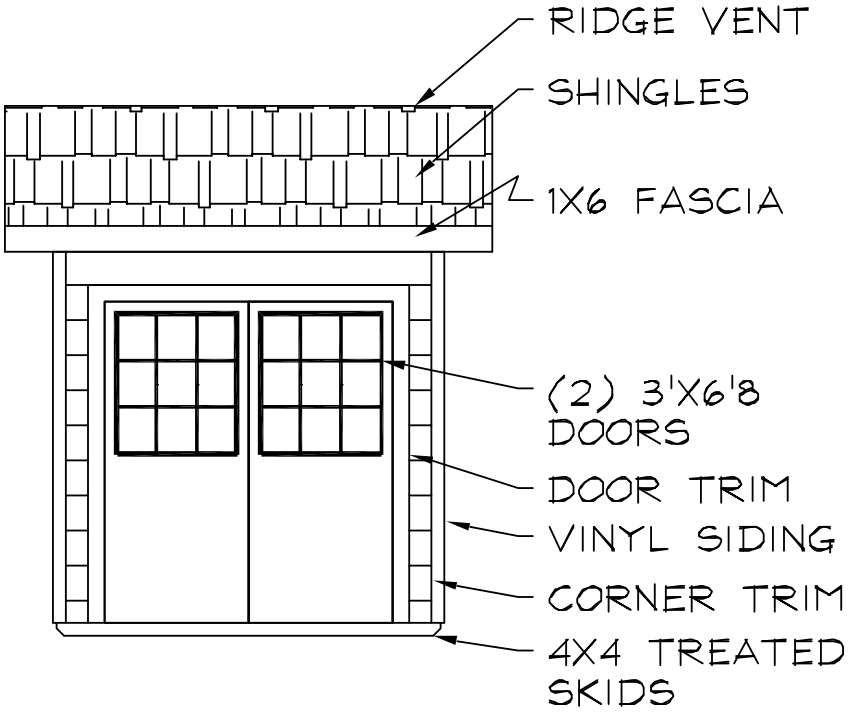
RIDGE VENT
SHINGLES
1X6 FASCIA
(2) 3'X6'8 DOORS
DOOR TRIM
VINYL SIDING
CORNER TRIM
4X4 TREATED SKIDS

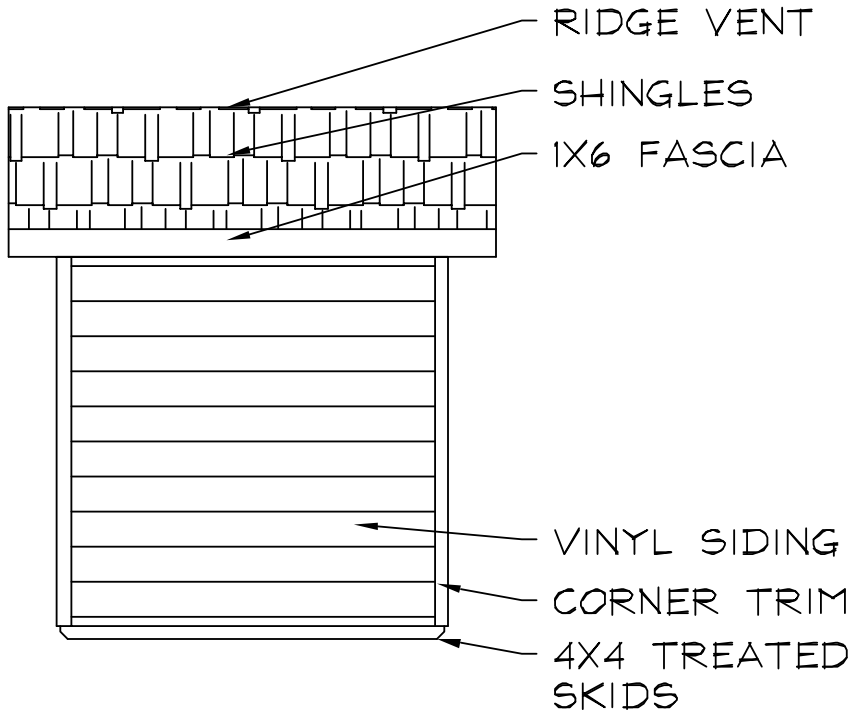
RIDGE VENT
SHINGLES
1X6 FASCIA
VINYL SIDING
CORNER TRIM
4X4 TREATED SKIDS

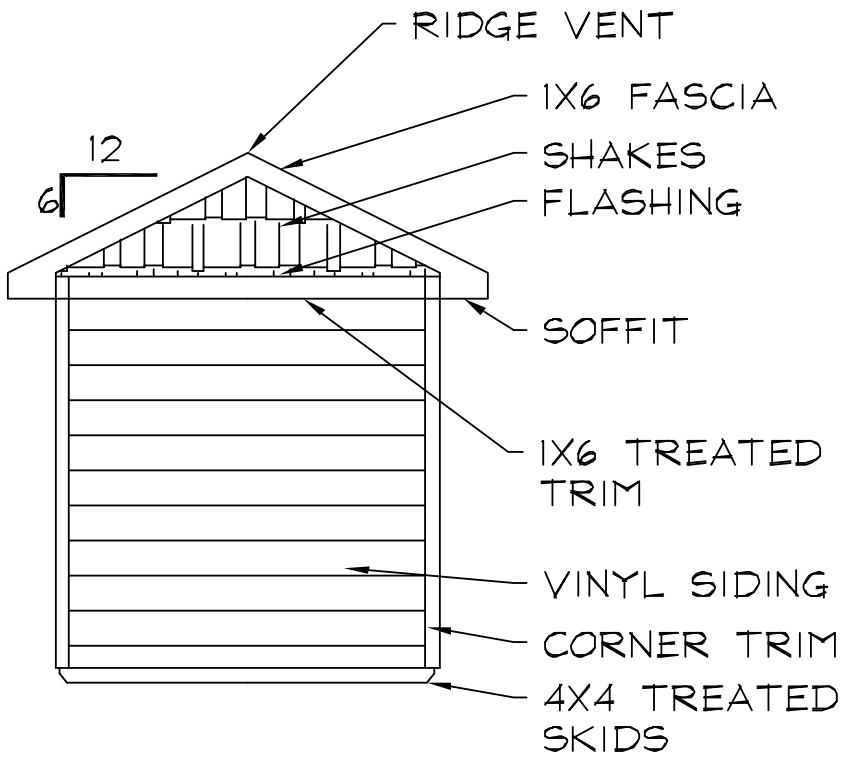
RIDGE VENT
1X6 FASCIA
12
6
SHAKES
FLASHING
SOFFIT
1X6 TREATED TRIM
VINYL SIDING
CORNER TRIM
4X4 TREATED SKIDS

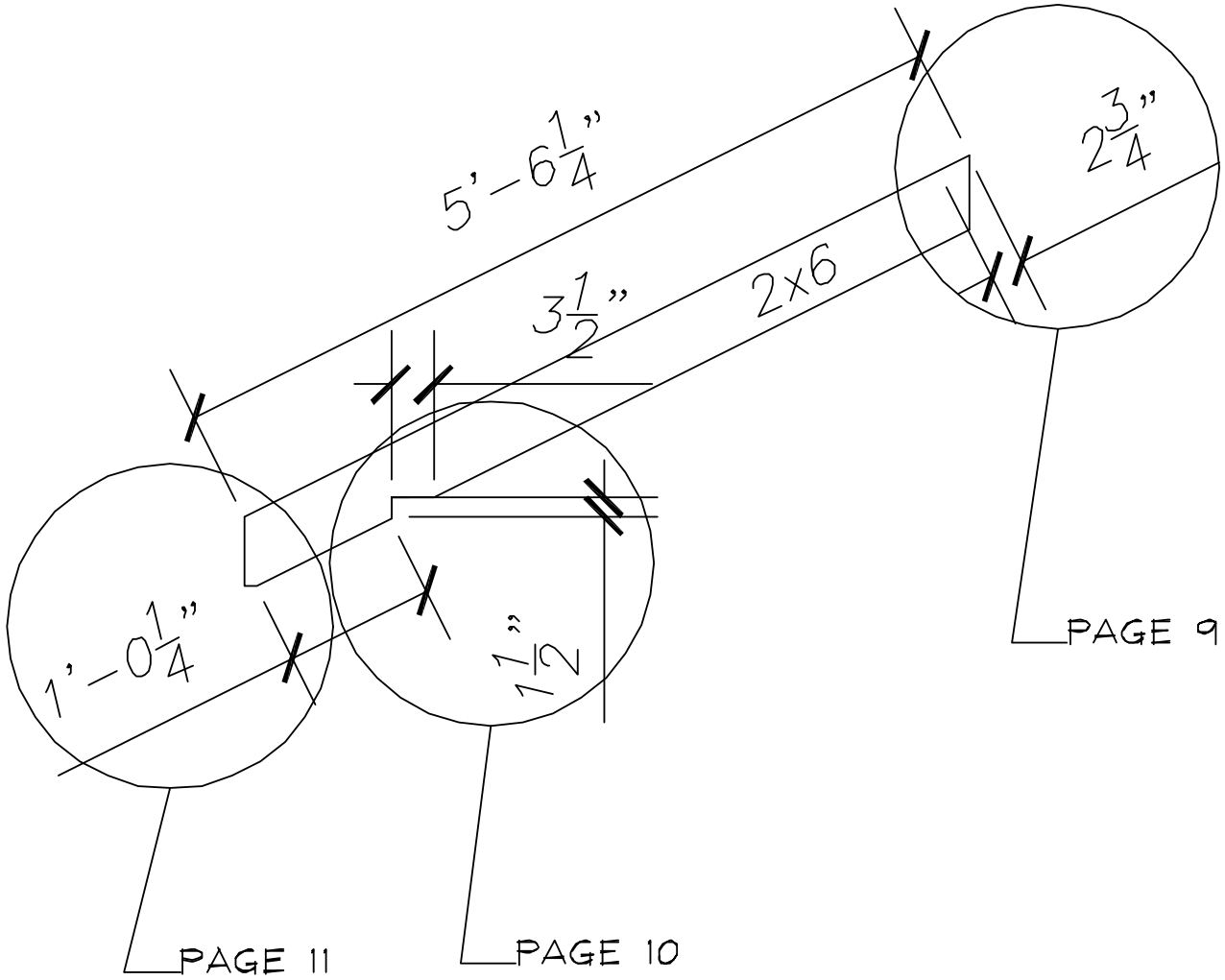
5'-6 1/4"
3 1/2"
2x6
2 3/4"
1'-0 1/4"
1 1/2"
PAGE 9
PAGE 11
PAGE 10

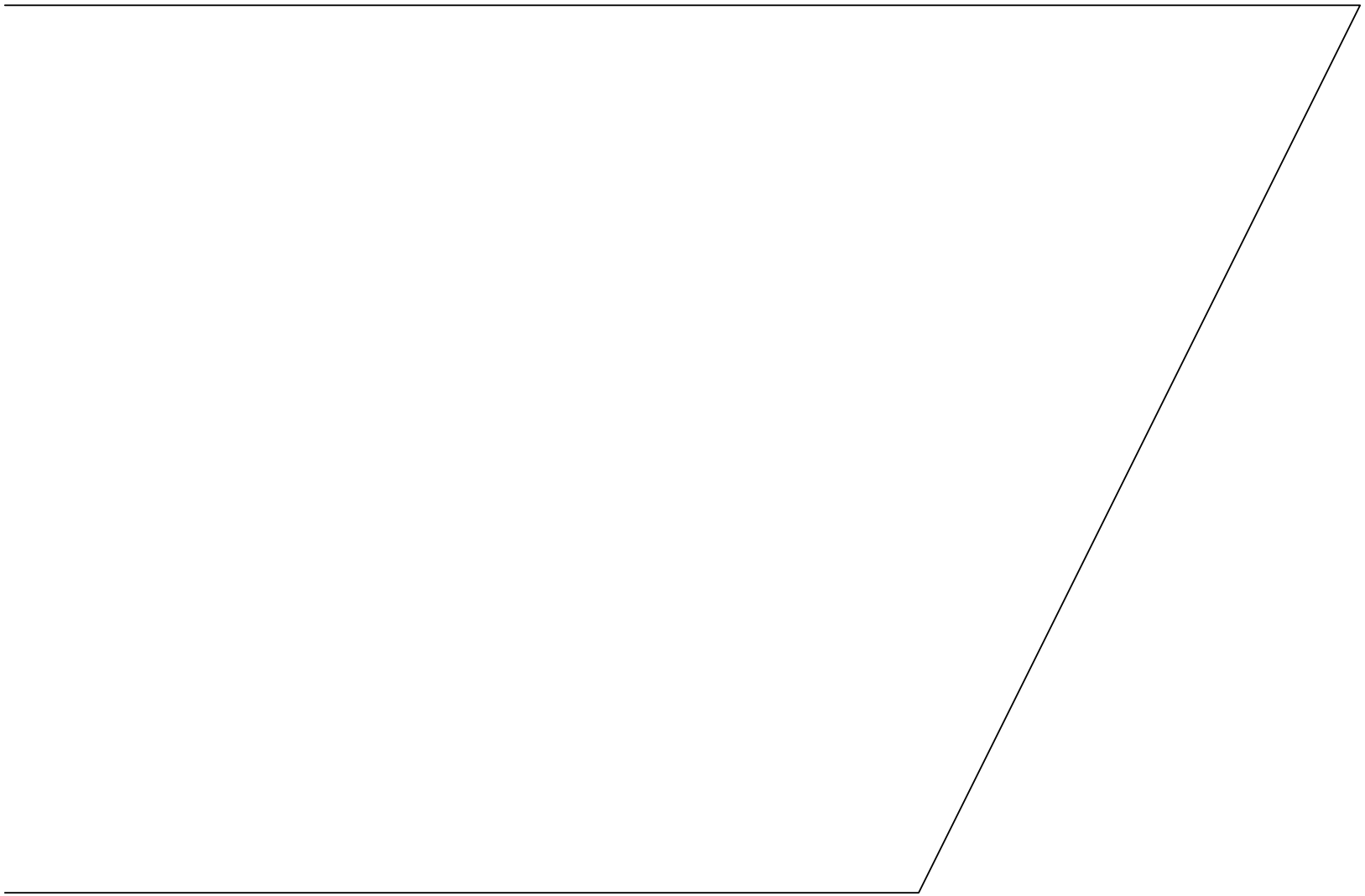

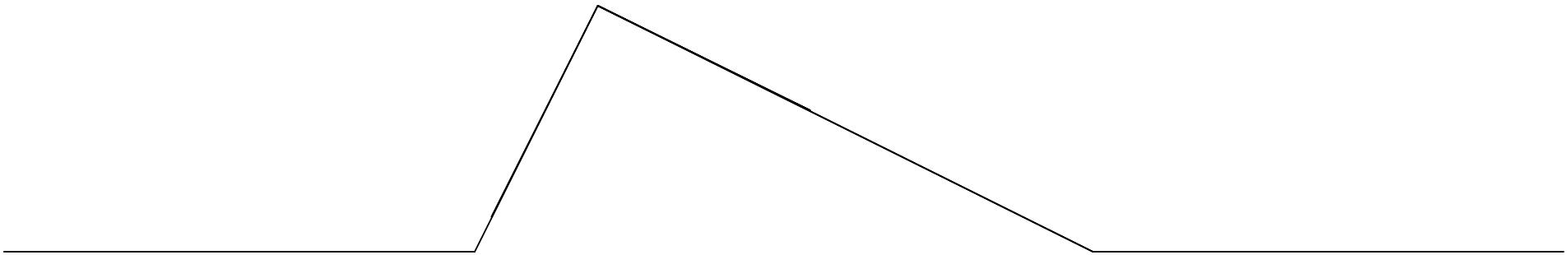

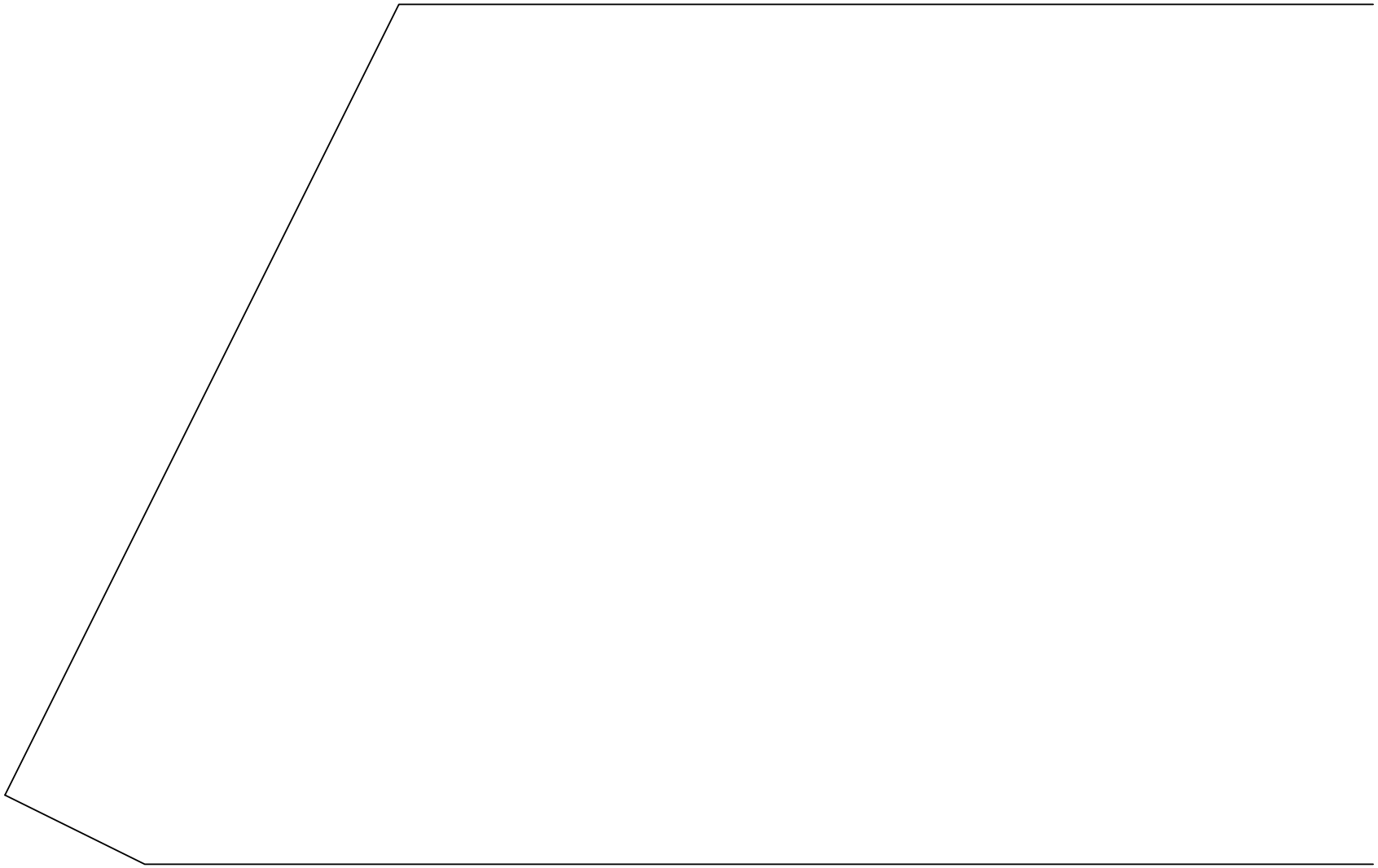

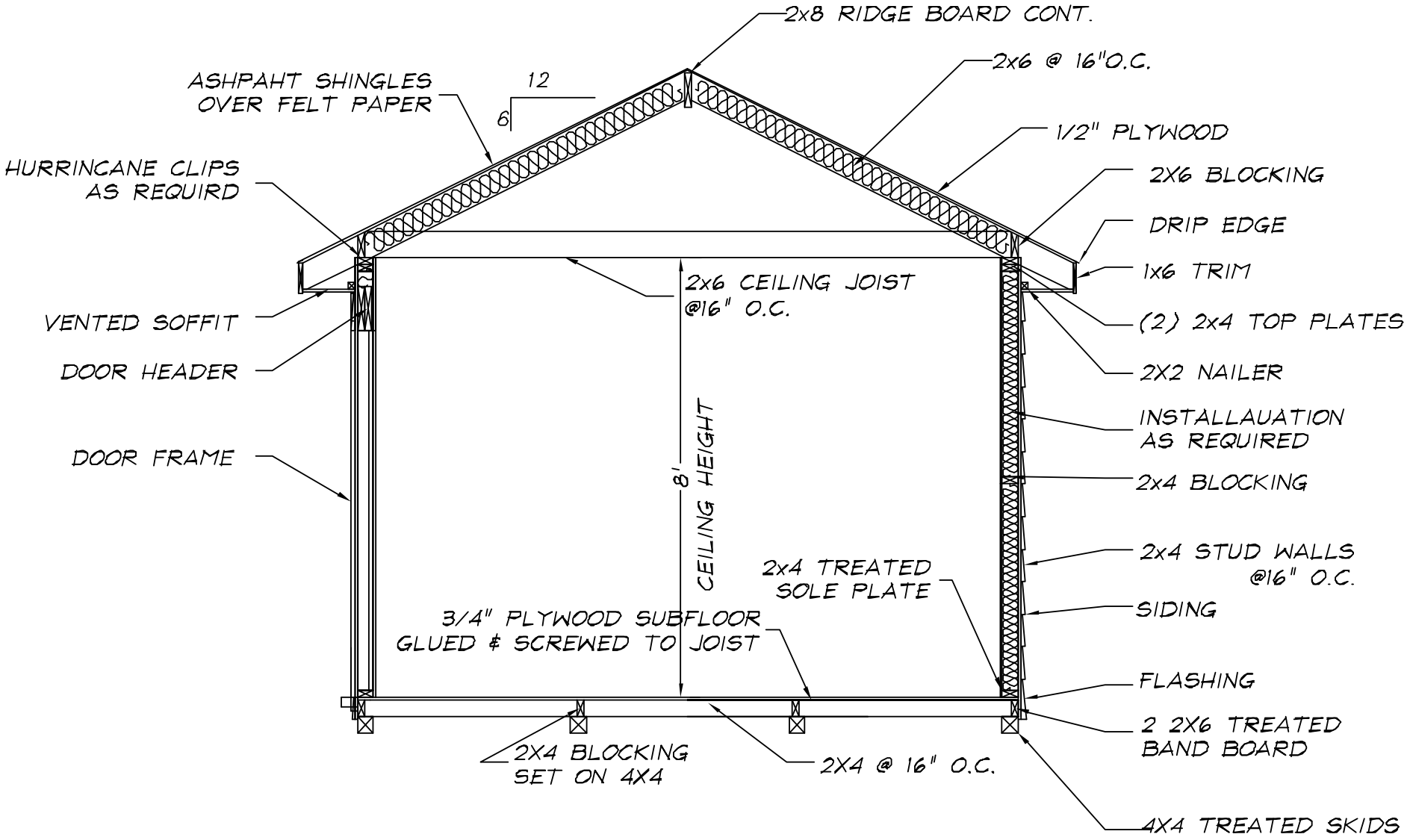

 N.T.S. WALL SECTION

WWW.STORAGESHED-PLANS.COM

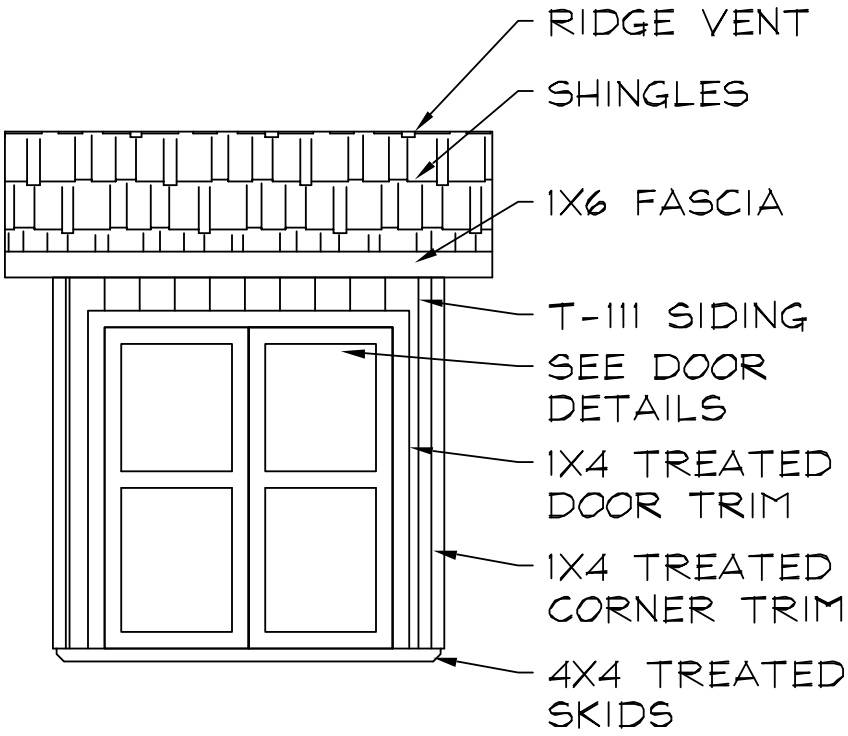

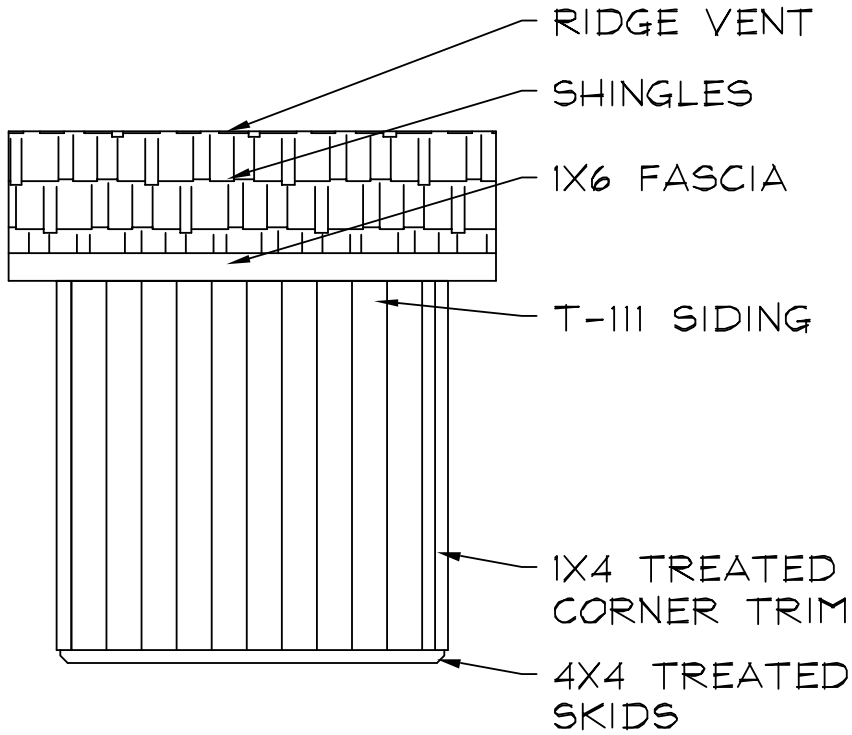
RIDGE VENT
SHINGLES
1X6 FASCIA
T-111 SIDING
1X4 TREATED
CORNER TRIM
4X4 TREATED
SKIDS

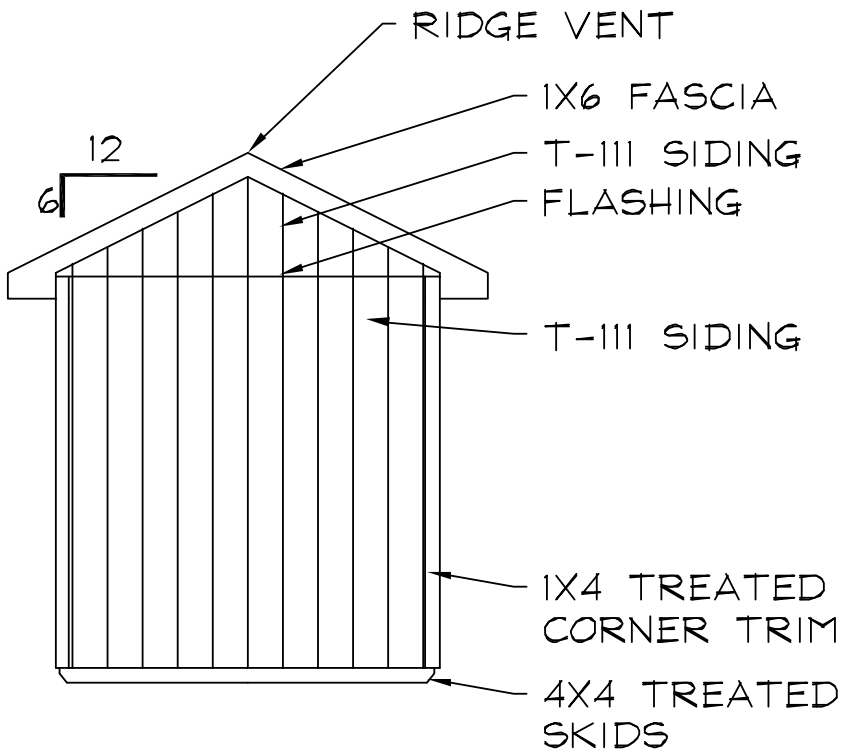
RIDGE VENT
1X6 FASCIA
12
6
T-111 SIDING
FLASHING
T-111 SIDING
1X4 TREATED
CORNER TRIM
4X4 TREATED
SKIDS

 COPYRIGHT COASTAL HOME DESIGNS LLC.

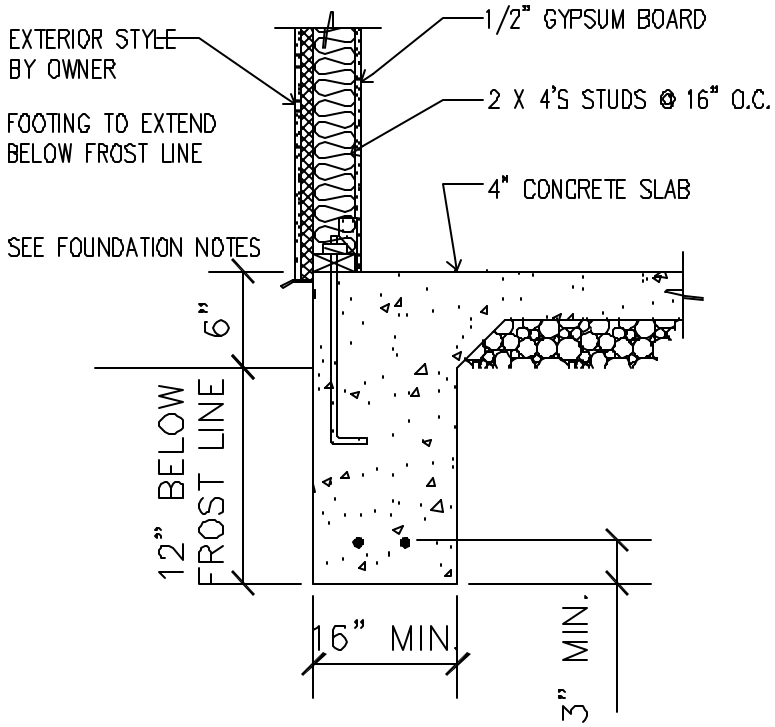

CONCRETE SLAB

N.T.S.

 COPYRIGHT COASTAL HOME DESIGNS LLC.

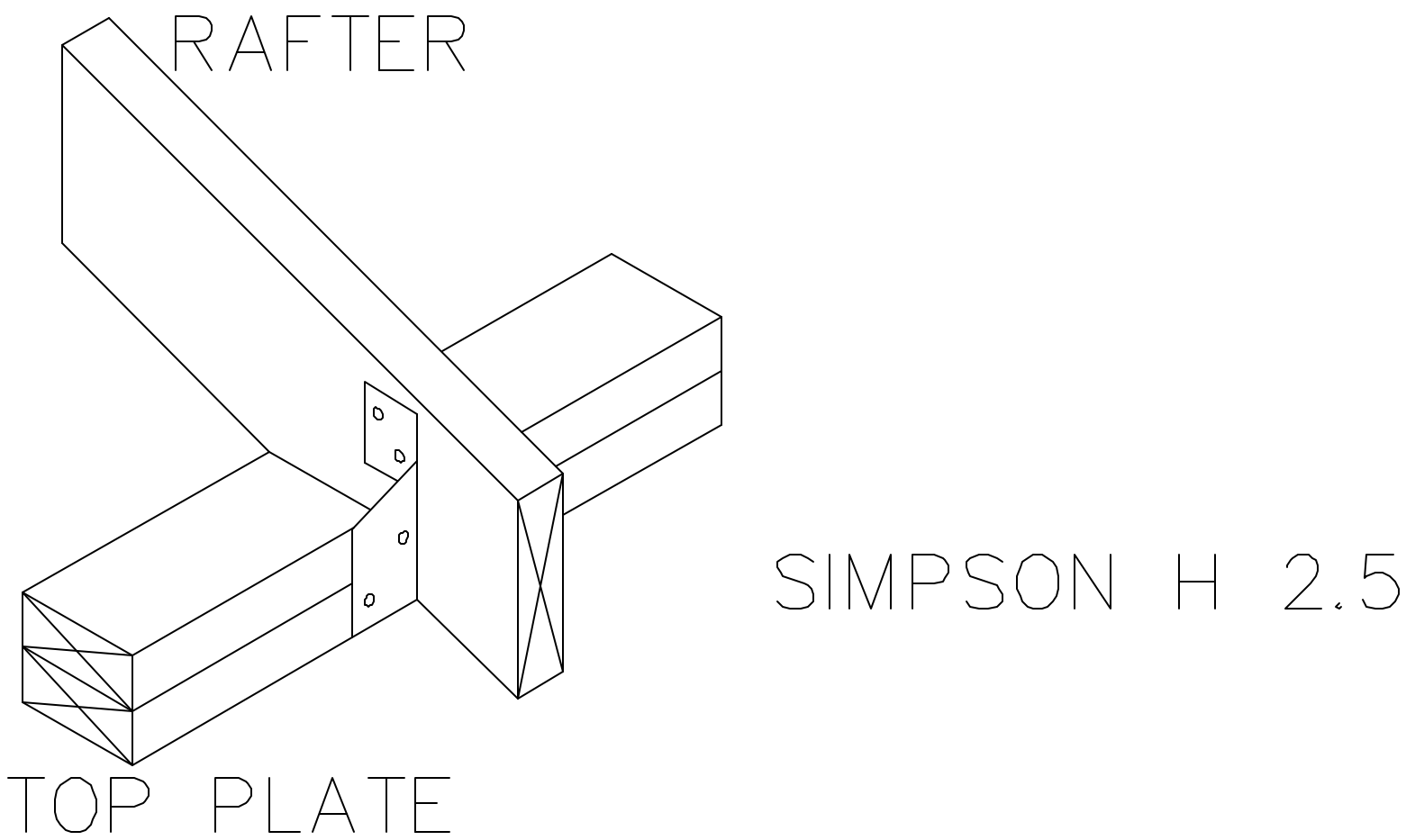

HOLD DOWN @ RAFTER

N.T.S.

 COPYRIGHT COASTAL HOME DESIGNS LLC.

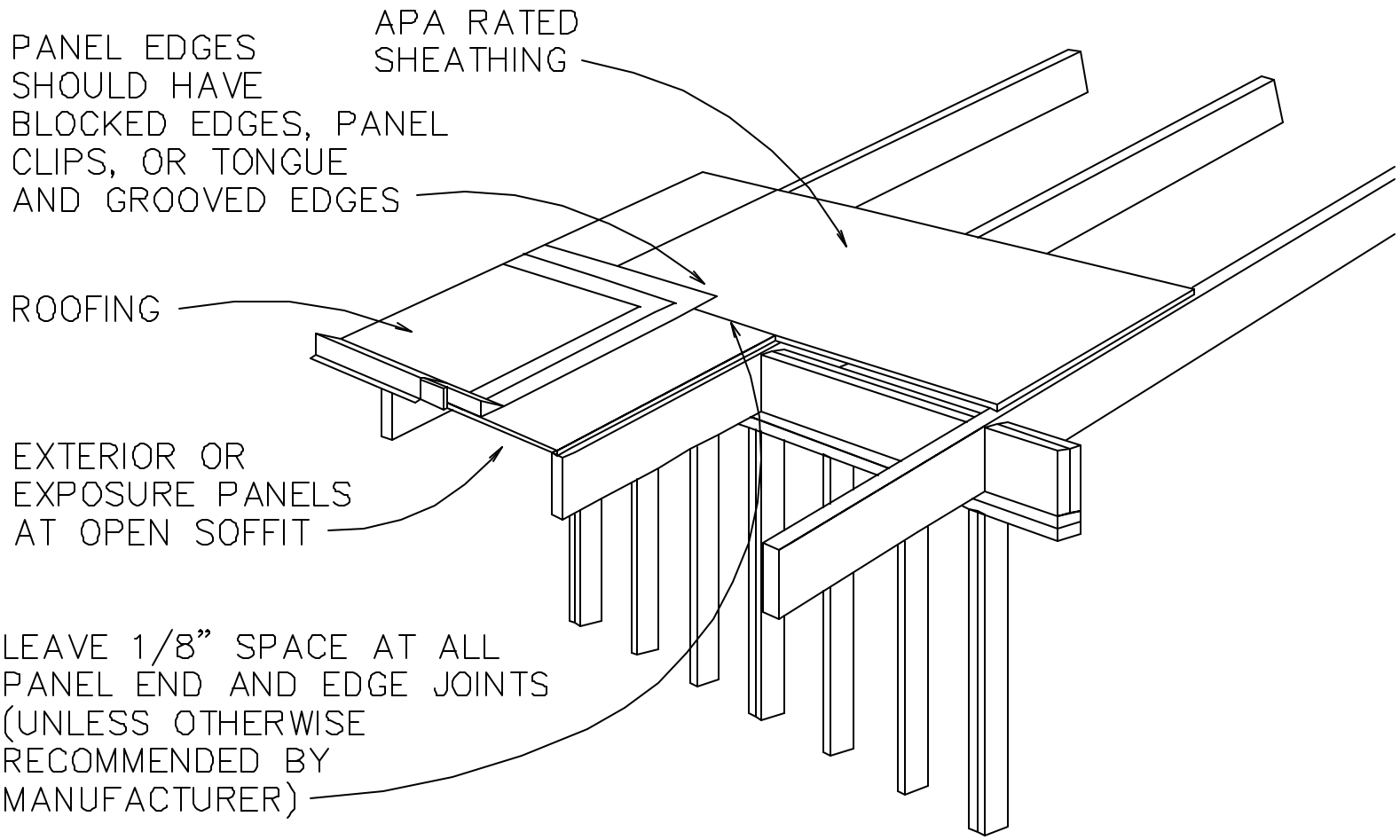

OVERHANG DETAIL

N.T.S.

 COPYRIGHT COASTAL HOME DESIGNS LLC.

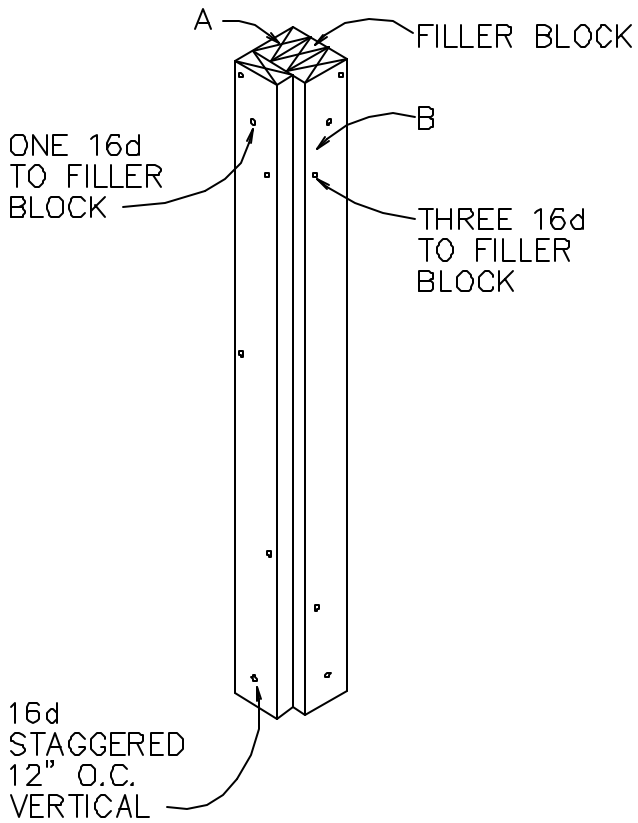

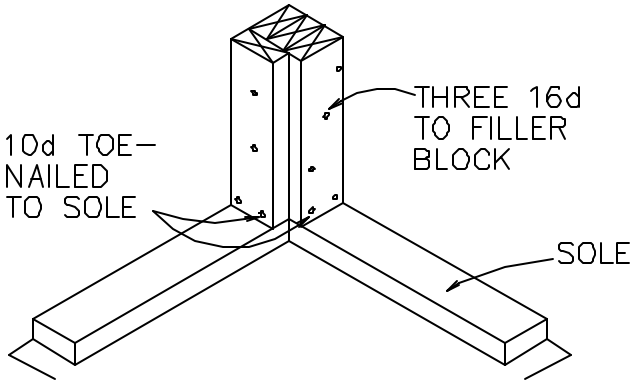

CORNER FRAMING

N.T.S.

 COPYRIGHT COASTAL HOME DESIGNS LLC.

TWO 16d
TOENAILS
EACH END

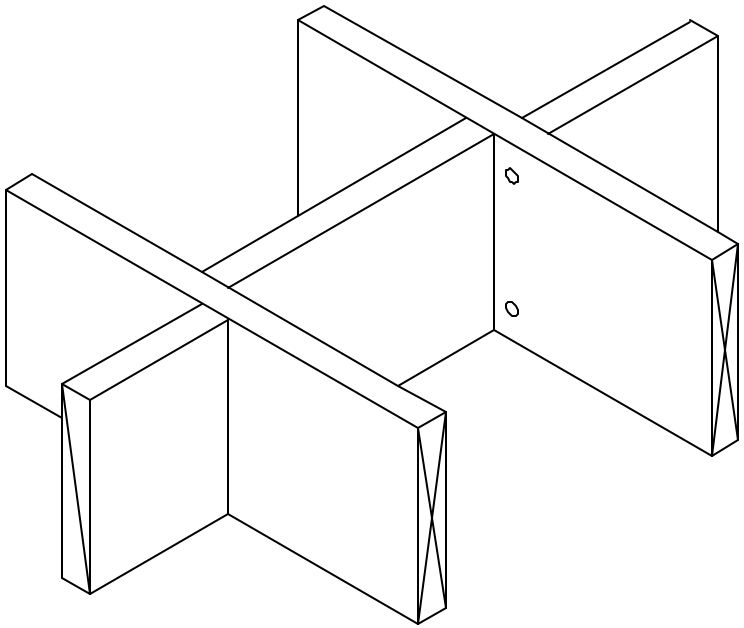

SOLID BRIDGING
STAGGER BOARDS FOR
EASE OF NAILING

BLOCKING DETAIL

N.T.S.

 COPYRIGHT COASTAL HOME DESIGNS LLC.

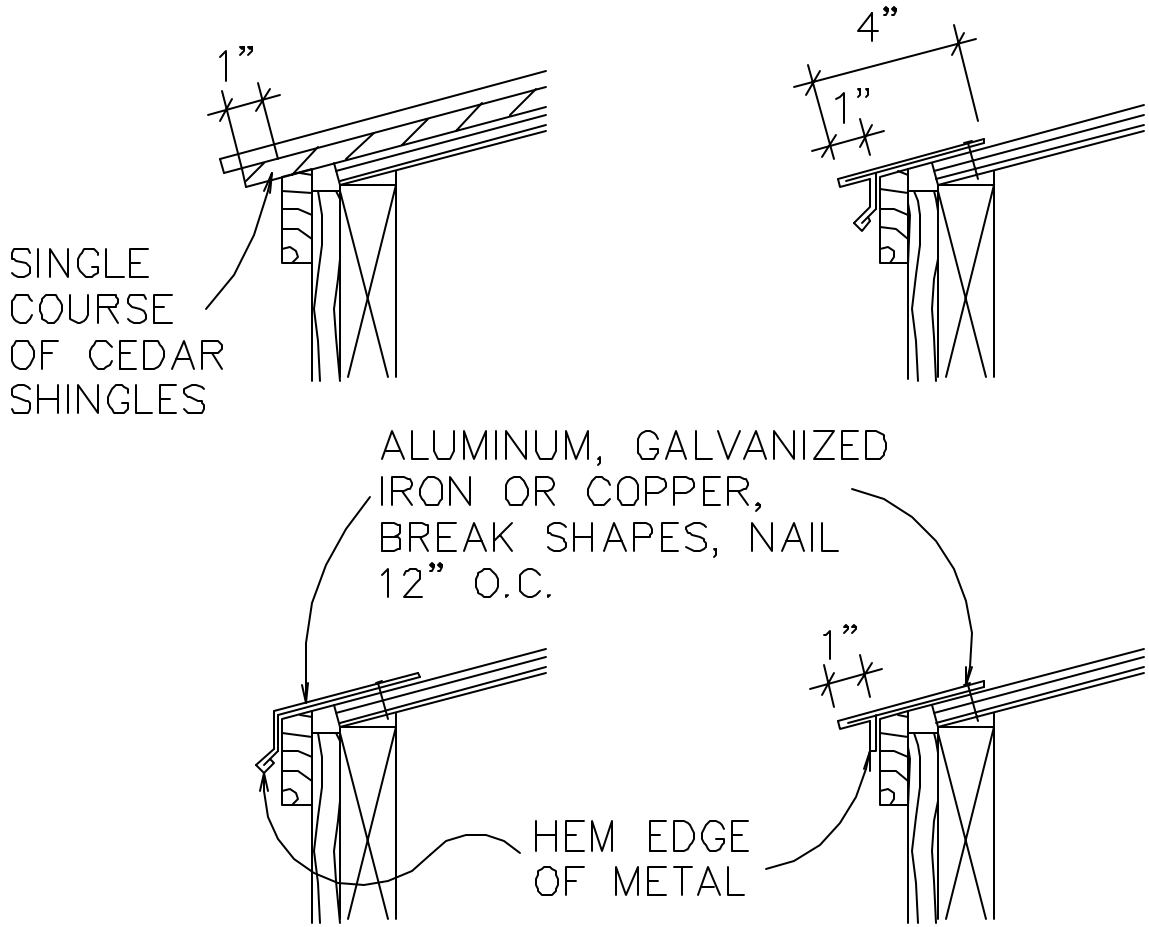

DRIP EDGE DETAIL

N.T.S.

 COPYRIGHT COASTAL HOME DESIGNS LLC.

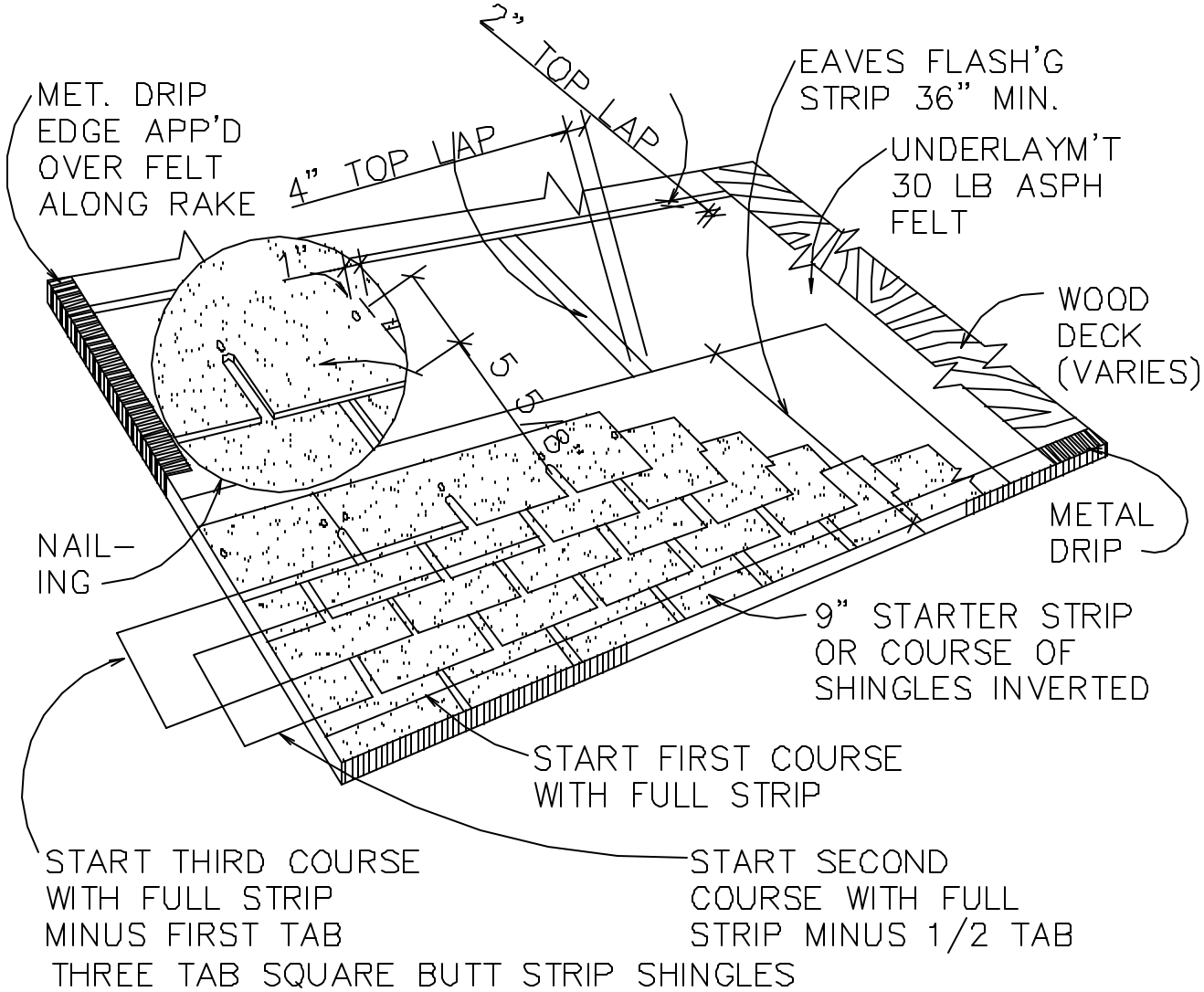

ROOFING LAYOUT

N.T.S.

 COPYRIGHT COASTAL HOME DESIGNS LLC.

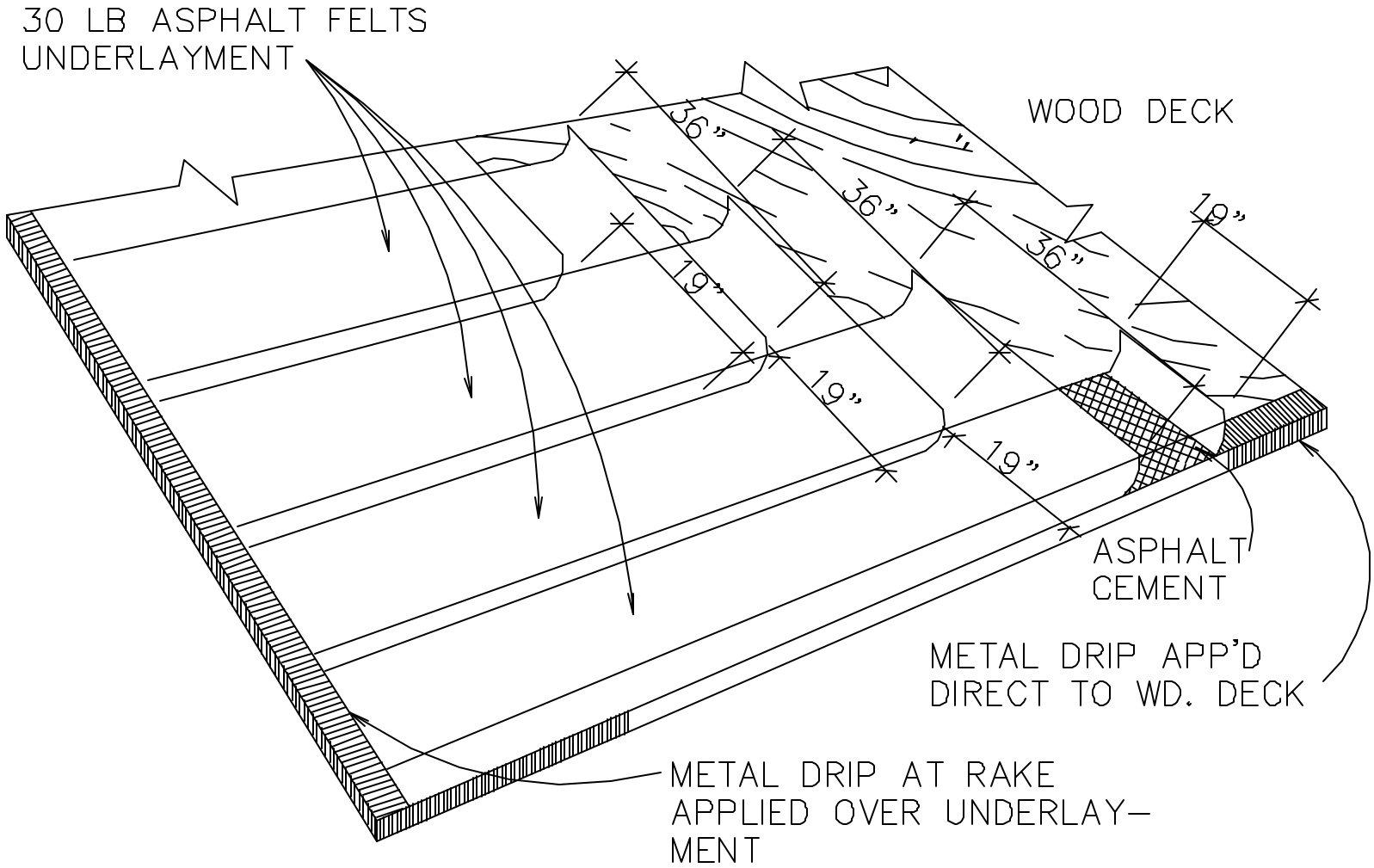

Use only nails to hold underlayment in place until shingles are laid.

FELT PAPER LAYOUT

N.T.S.

 COPYRIGHT COASTAL HOME DESIGNS LLC.

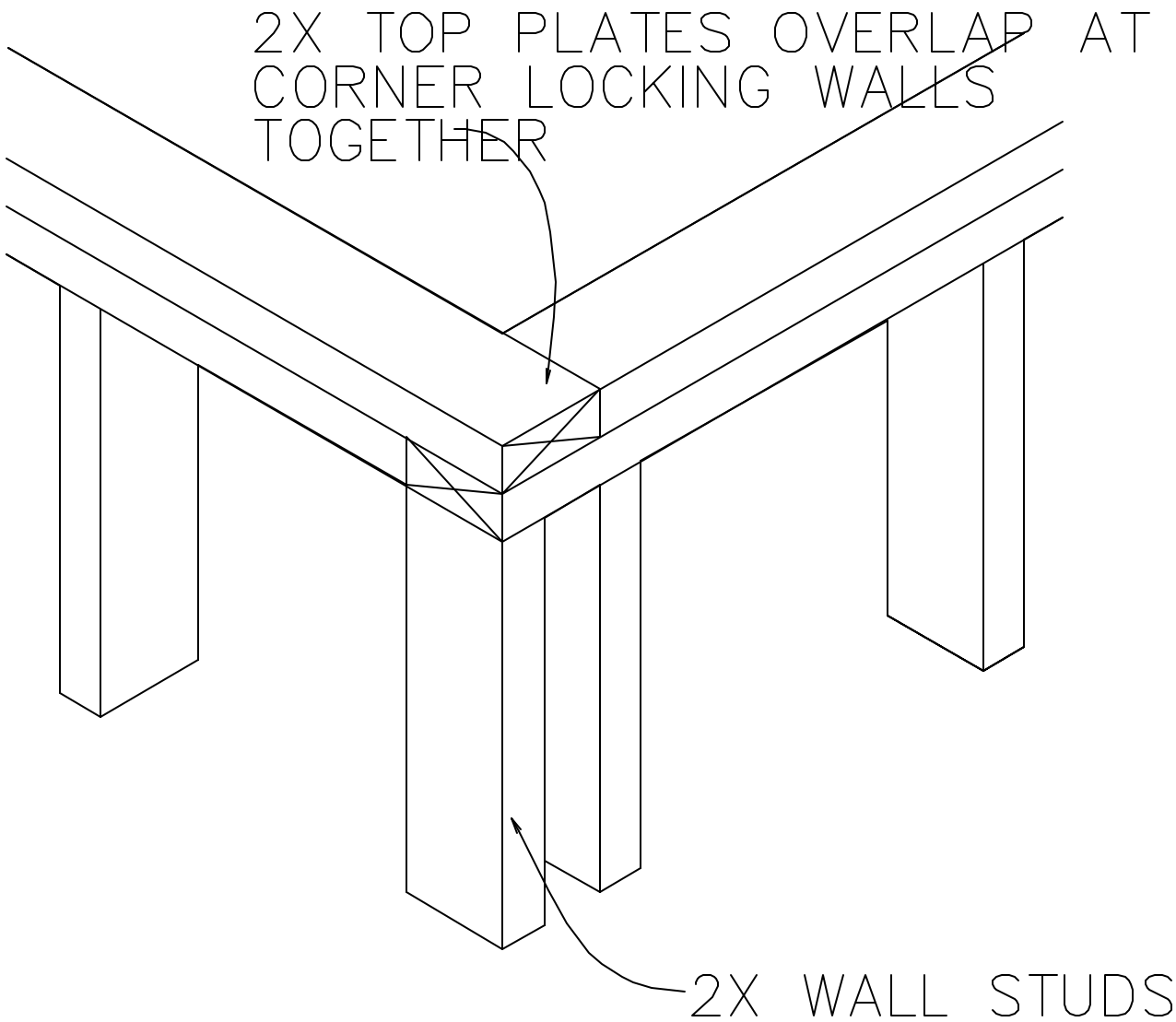

TOP PLATE DETAILS

N.T.S.

 COPYRIGHT COASTAL HOME DESIGNS LLC.

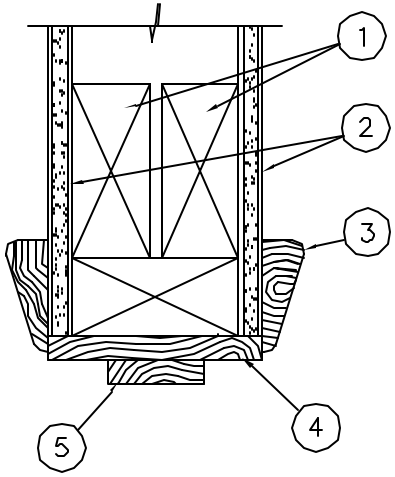

1. 2 X HEADER.
2. 5/8" GYPSUM BOARD.
3. WOOD TRIM.
4. WOOD HEAD.
5. WOOD STOP.

INTERIOR DOOR HEADER

N.T.S.

 COPYRIGHT COASTAL HOME DESIGNS LLC.

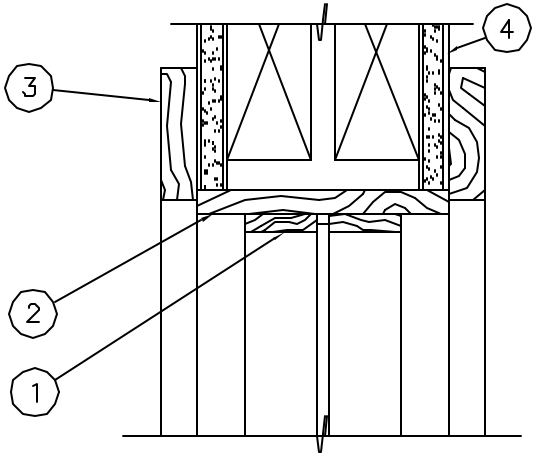

1. WOOD GLAZING STOPS STAIN GRADE.
2. 1" JAMB.
3. 1 X 3 TRIM STAIN GRADE.
4. 5/8" GYPSUM BOARD..

WOOD HEAD

N.T.S.

 COPYRIGHT COASTAL HOME DESIGNS LLC.

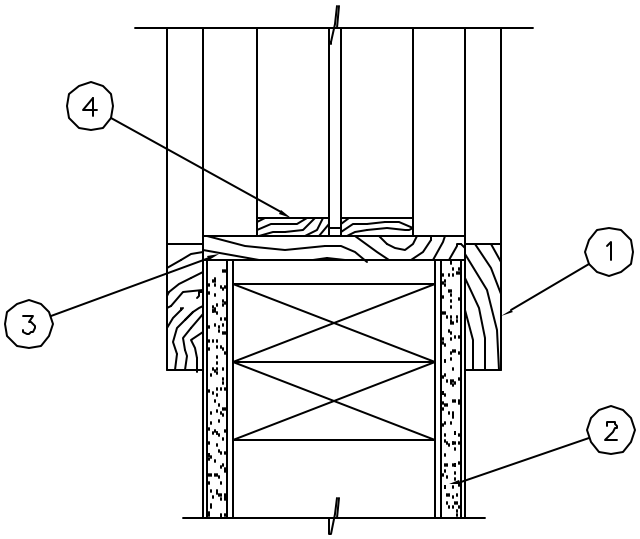

1. 1 X 3 TRIM STAIN GRADE.
2. 5/8 GYPSUM BOARD.
3. 1" JAMB STAIN GRADE.
4. GLAZING STOPS STAIN GRADE.

WOOD SILL

N.T.S.

 COPYRIGHT COASTAL HOME DESIGNS LLC.

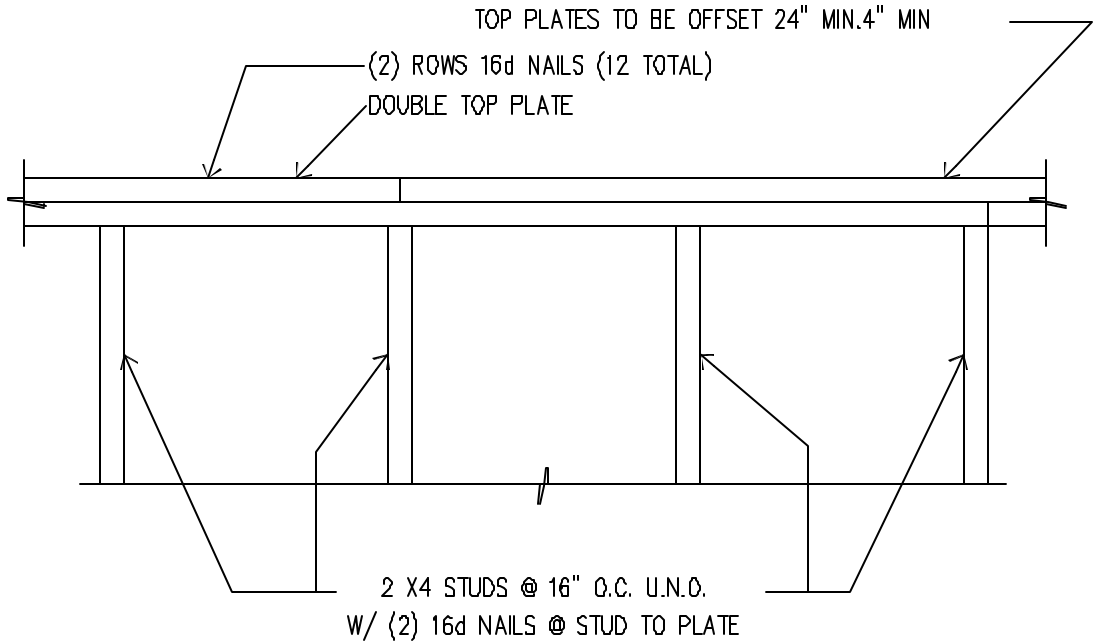

TOP PLATE SPLICE

N.T.S.

 COPYRIGHT COASTAL HOME DESIGNS LLC.

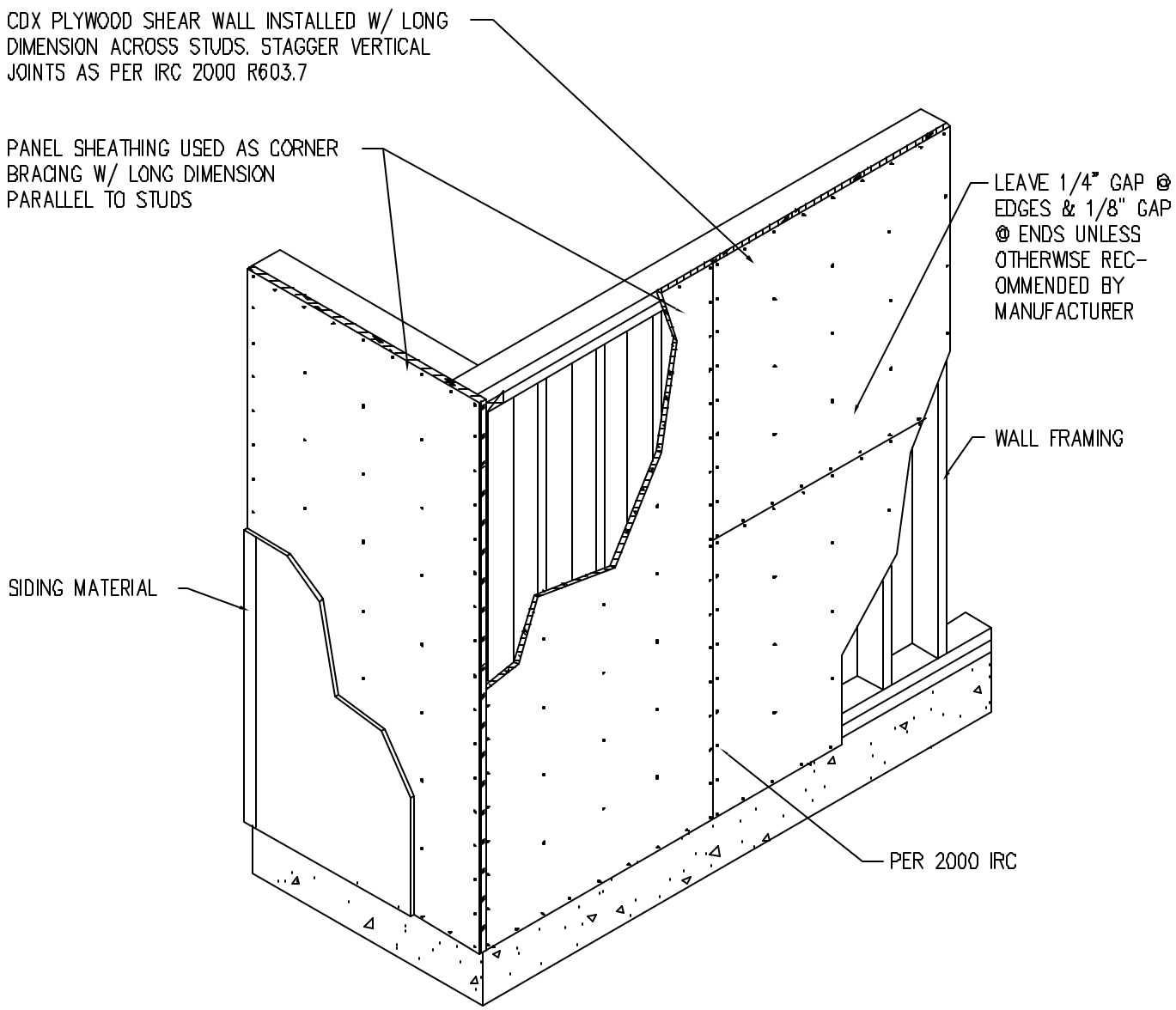

TYPICAL SHEAR WALL

N.T.S.

 COPYRIGHT COASTAL HOME DESIGNS LLC.

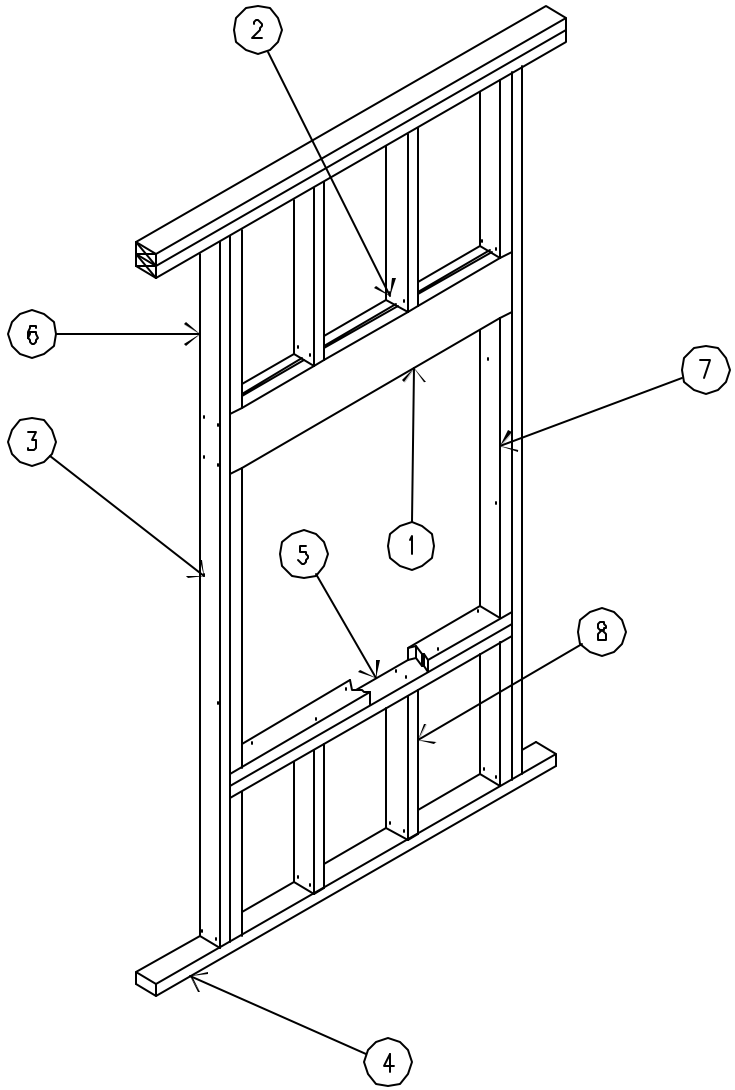

1. DOUBLE HEADER WITH PLYWOOD
2. TOENAIL.
3. 8" O.C. STAGGERED.
4. SOLE PLATE.
5. SILL SHOWN CUT AWAY TO SHOW NAILING.
6. KING STUD.
7. TRIMMER.
8. CRIPPLE STUD.

WINDOW OPENING

N.T.S.

 COPYRIGHT COASTAL HOME DESIGNS LLC.

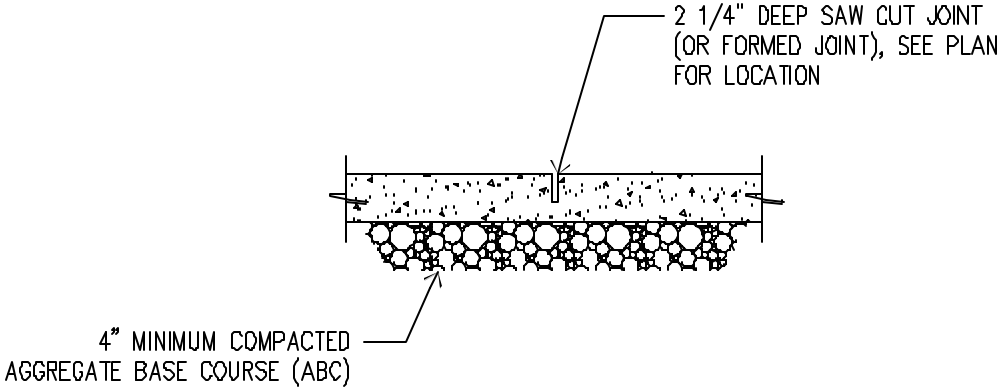

CONTROL JOINT IN SLAB

N.T.S.

 COPYRIGHT COASTAL HOME DESIGNS LLC.

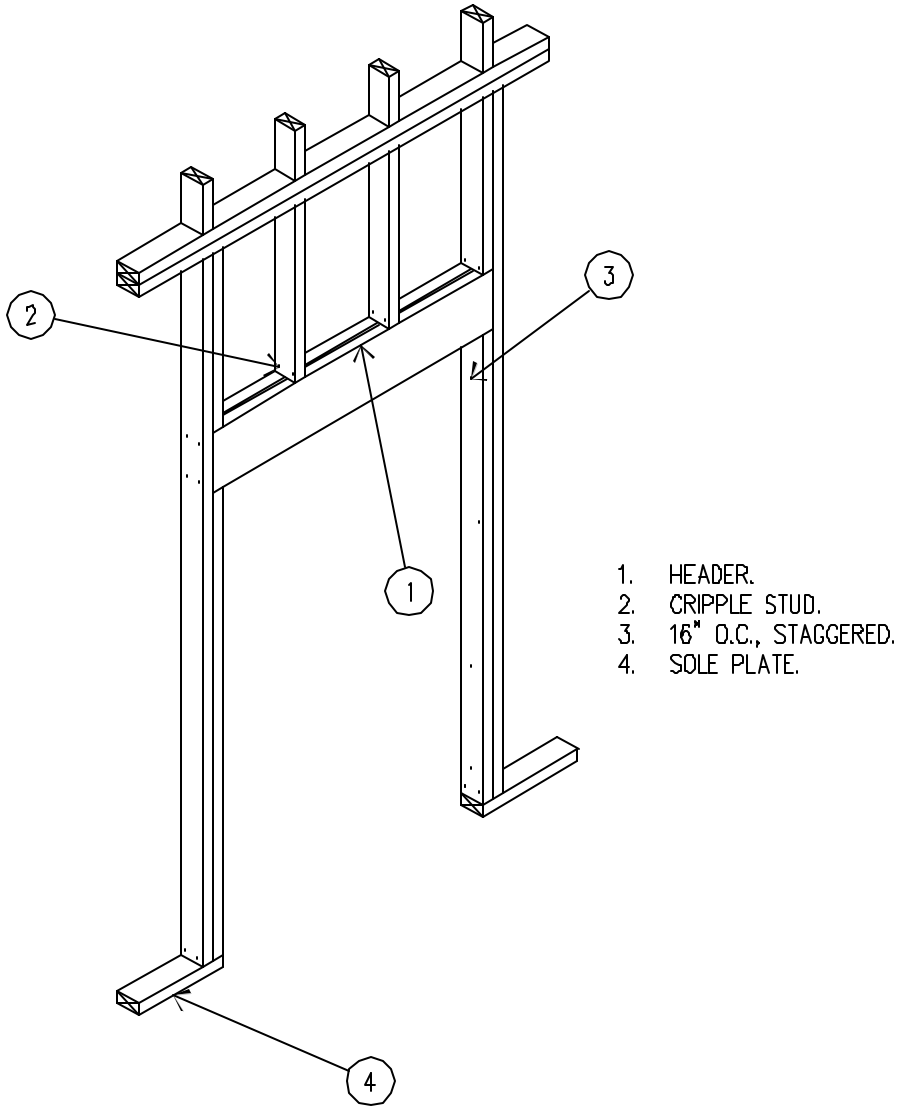

1. HEADER.
2. CRIPPLE STUD.
3. 16" O.C., STAGGERED.
4. SOLE PLATE.

DOOR OPENING

N.T.S.

 COPYRIGHT COASTAL HOME DESIGNS LLC.

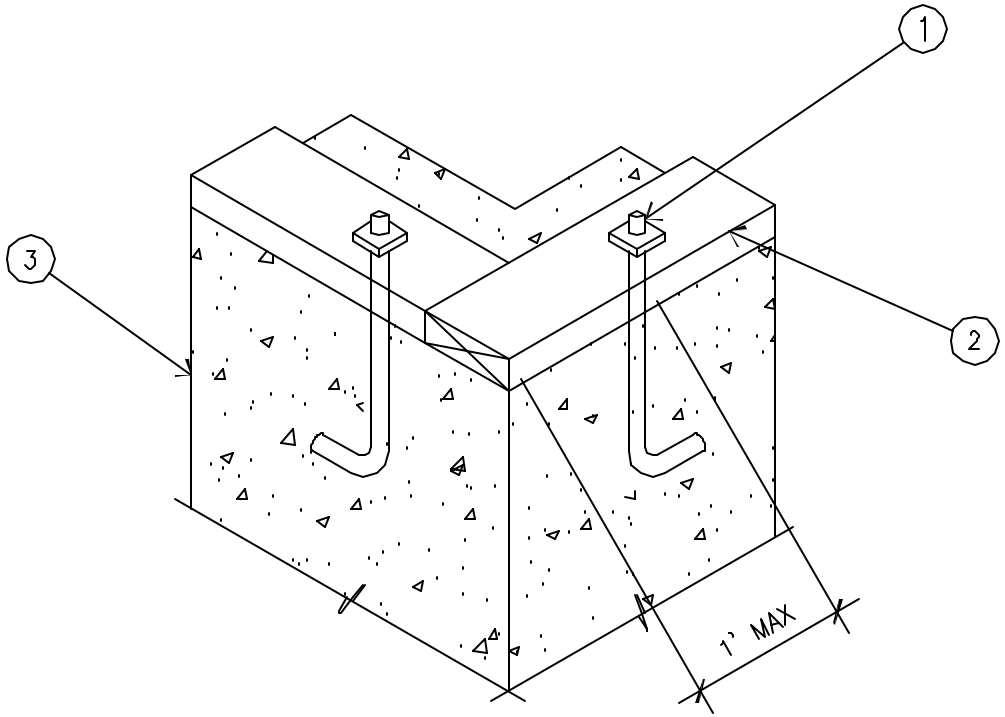

1. ANCHOR BOLT.
2. 2 X 6 SILL PLATE.
3. CONCRETE FOUNDATION

2 X 4 SILL

N.T.S.